LOOKOUT PLATFORM

N.T.S.

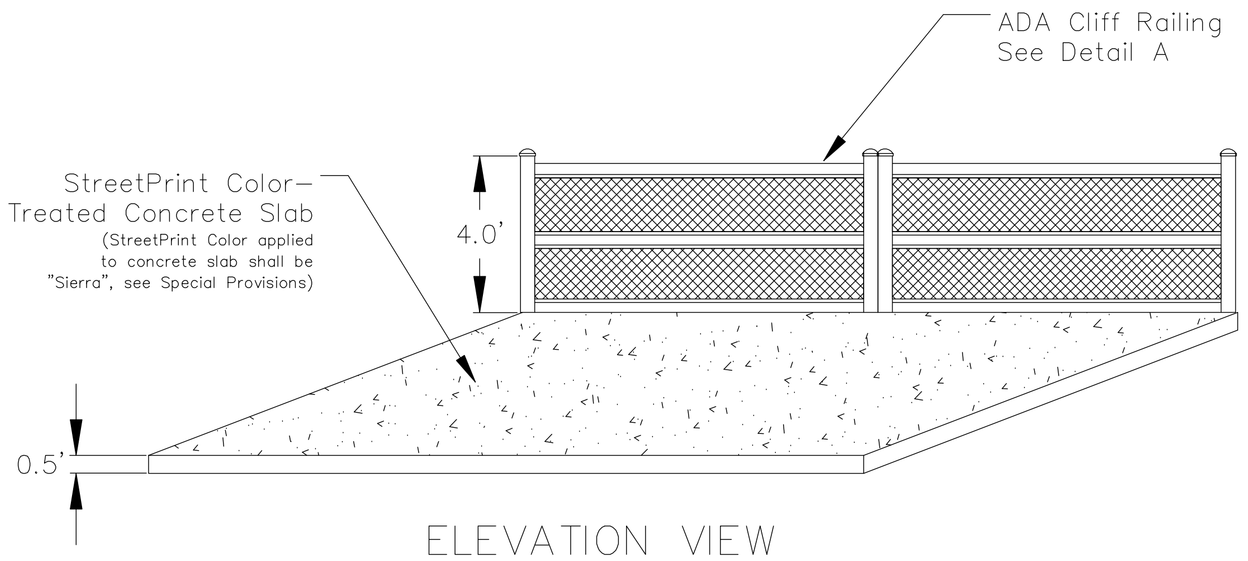

ELEVATION VIEW

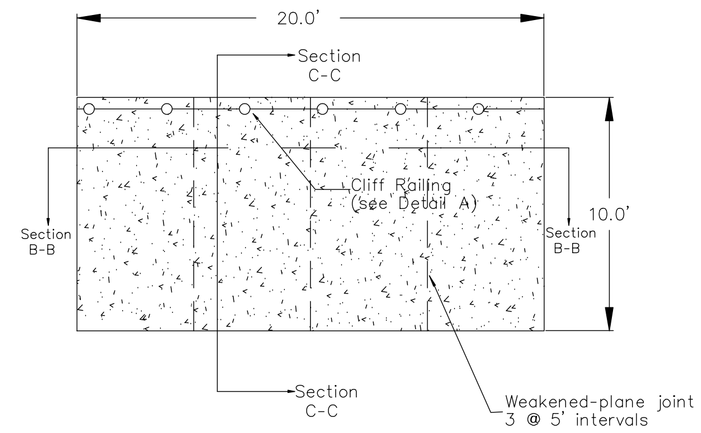

PLAN VIEW

LOOKOUT PLATFROM CROSS SECTIONS

Horiz: 1" = 10'
Vert: 1" = 10'

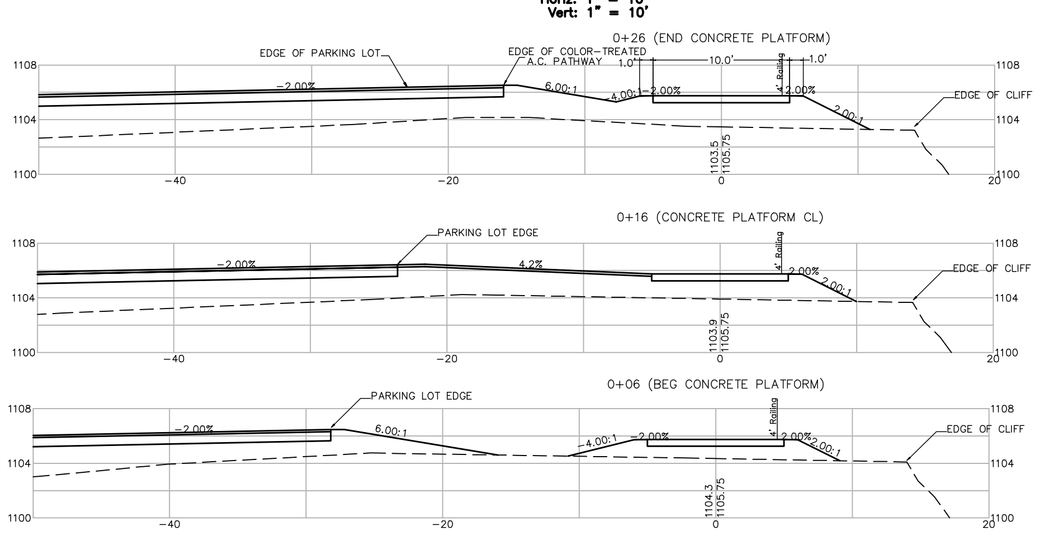

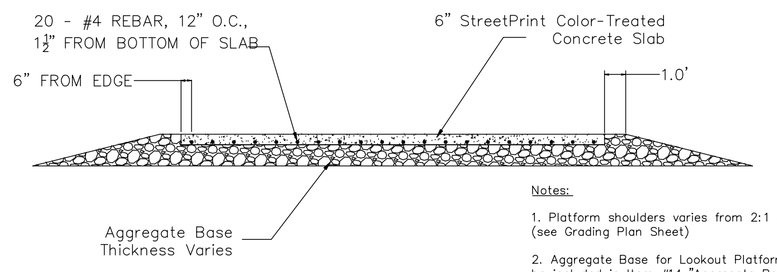

SECTION B-B

Notes:

1. Platform shoulders varies from 2:1 to 4:1 (see Grading Plan Sheet)

2. Aggregate Base for Lookout Platform will be included in Item #14-"Aggregate Base Class II)" of the contract items.

3. 3,000 PSI minimum concrete, ¾" aggregate.

4. StreetPrint Color applied to concrete slab shall be "Sierra", see Special Provisions.

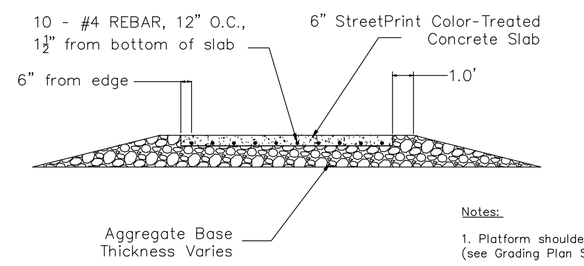

SECTION C-C

Notes:

1. Platform shoulders varies from 2:1 to 4:1 (see Grading Plan Sheet)

2. Aggregate Base for Lookout Platform will be included in Item #14-"Aggregate Base Class II)" of the contract items.

3. 3,000 PSI minimum concrete, ¾" aggregate.

4. StreetPrint Color applied to concrete slab shall be "Sierra", see Special Provisions.

DETAIL A - CLIFF RAILING

N.T.S.

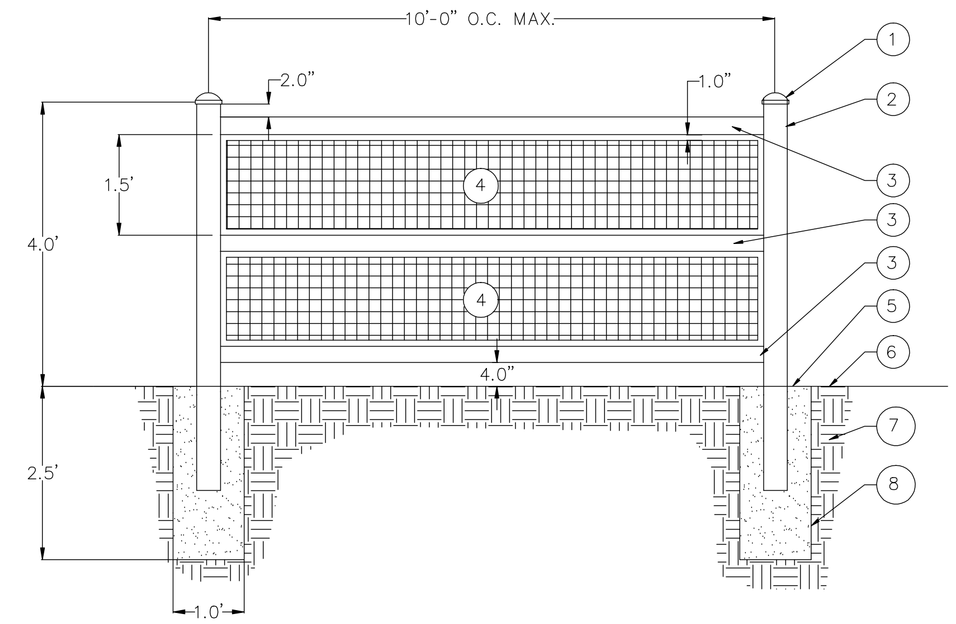

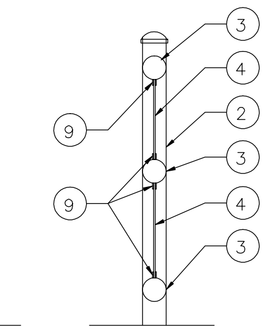

POST AND RAIL SECTION

1. WEATHER PROOF STEEL POST CAPS – PAINT GOLDFLECK
2. 2 1/4" O.D. STEEL POST
3. 2 1/4" O.D. STEEL PIPE WELD ALL RAILS TO CENTER OF POST
4. 11 GAUGE BY 2" WIRE MESH, BLACK POWDER COATED
5. CONCRETE FOOTING – INCLUDED IN ITEM #31 "4' BLACK POWDERED COATED CLIFF RAILING" OF THE CONTRACT ITEMS
6. FINISHED GRADE
7. EXISTING SUBGRADE
8. 12" SAUNA TUBE
9. 3/16" THICK BY 1" HIGH FLAT BAR ON EACH SIDE OF MESH. WELD TO HORIZONTAL RAILS.

NOTES:
1. ALL WELDS SHALL BE GROUND SMOOTH.
2. ALL STEEL WORK SHALL BE PRIMED AND PAINTED WITH RUST INHIBITOR PAINT, AND BLACK POWDER COATED, EXCEPT POST CAPS.
3. RAIL FABRICATION SHALL BE PER THIS DETAIL OR APPROVED EQUAL. SUBMIT ALTERNATE DETAIL TO ENGINEER FOR APPROVAL PRIOR TO FABRICATION.

PARKING AREA LAYOUT

N.T.S.

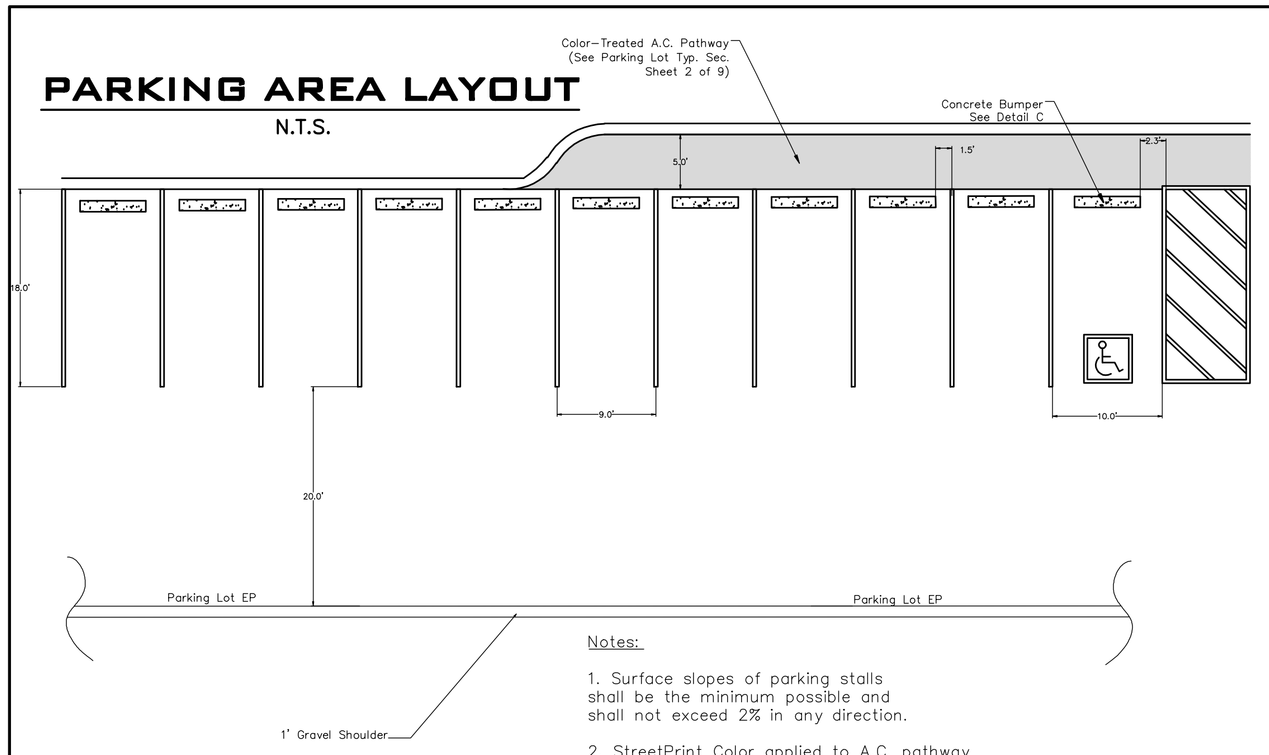

Notes:

1. Surface slopes of parking stalls shall be the minimum possible and shall not exceed 2% in any direction.

2. StreetPrint Color applied to A.C. pathway shall be "Sierra", see Special Provisions.

DISABLED PERSONS PARKING STALL

N.T.S.

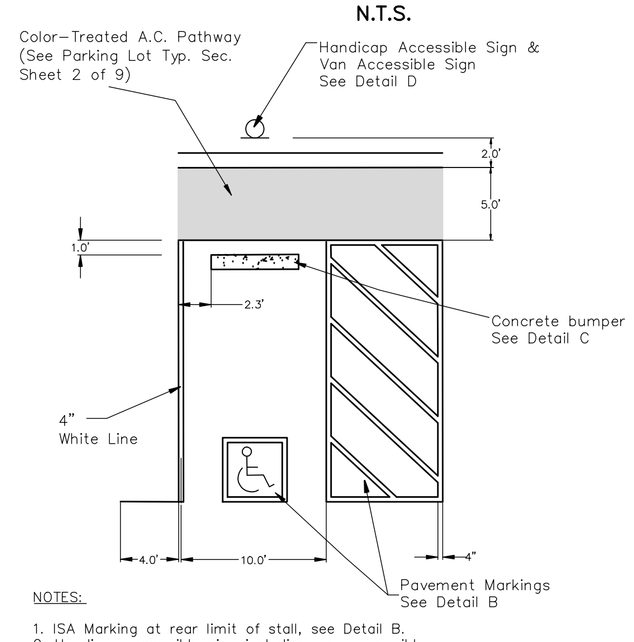

NOTES:

1. ISA Marking at rear limit of stall, see Detail B.
2. Handicap accessible sign including, van accessible, located behind each handicap parking, see Detail D.
3. Streetprint Color applied to A.C. pathway shall be "Sierra", see SpecicalProvisions.

DETAIL B

N.T.S.

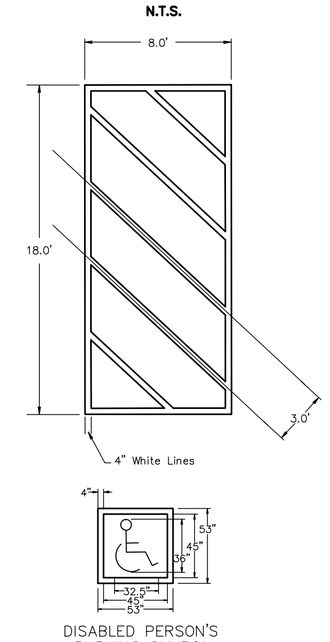

DISABLED PERSON'S PARKING SYMBOL

N.T.S.

DETAIL C - CONCRETE BUMPER

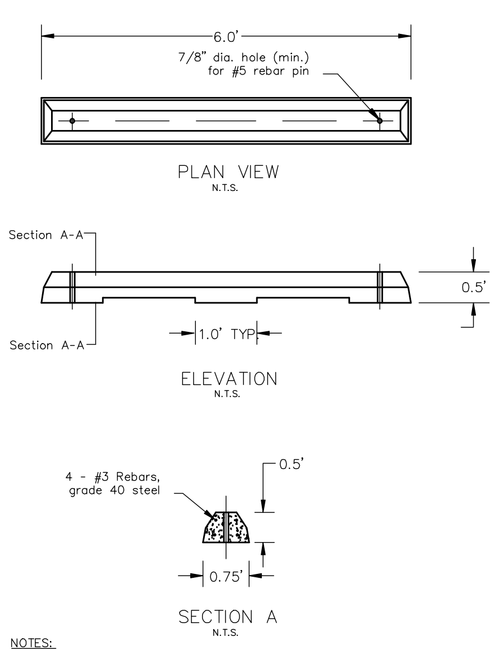

PLAN VIEW
N.T.S.

ELEVATION
N.T.S.

SECTION A
N.T.S.

NOTES:

1. 3,000 PSI minimum concrete, ¾" aggregate

DETAIL D

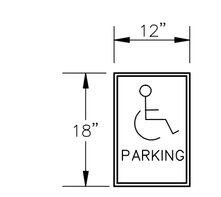

ISA PARKING SIGN (R99)
N.T.S.

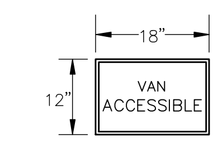

VAN ACCESSIBLE SIGN (R99A)
N.T.S.

Notes:

1. The bottom of the sign panel shall be a minimum of 6'-8" above the surface of existing ground.

2. The R99A "Van Accessible" sign shall be mounted below the R99 "ISA Parking" sign.

PLANS FOR THE CONSTRUCTION OF
SKYWAY LOOKOUT POINT PARKING & PEDESTRIAN VIEWING FACILITY
MISCELLANEOUS DETAIL SHEET

PROJECT NUMBER
51261-2-2005-1

3 of 9

FILE NO. E-2701