Section 5
Concurrent Environmental Water Planning Efforts

5.1 California Water Plan Update 2003

The California Department of Water Resources is currently updating its State Water Plan in Bulletin 160. This planning document will assess current state water supplies and uses for urban, agricultural, environmental, and other purposes. Future water needs will be forecast under a range of climatic conditions. New to the current update is the use of "futures" scenarios that can identify and evaluate diversified strategies and options to meet regional needs. Another new element of the plan is the establishment of monitoring criteria to measure the effectiveness of implemented water management options. Finally, Bulletin 160-03 will be integrated with numerous other water planning programs and entities, including CALFED, the Colorado River Board, the Central Valley Project Improvement Act, the State Water Resources Control Board Bay-Delta water rights hearings, Federal Energy Regulatory Commission re-licensing, and many others.

Environmental water analysis currently includes the following flow categories: Delta outflow, instream flow and anadramous fish requirements, and Wild & Scenic Flows. Terrestrial water demand is addressed primarily for managed wetlands where water allocations and use have already been quantified. The most recent draft (December 8, 2003) of the Plan Update also states a goal that terrestrial water use by native vegetation should be estimated, but views this demand as not being quantifiable at present.

5.2 Instream Flow Requirements in Butte County

The California Department of Fish and Game (DFG) is currently assessing the instream flow requirements for salmon in Butte Creek (see attached Figure 5-1). No specific time frame is known for the completion of this project, but it appears likely that some preliminary estimates will be available for the Environmental Water Project Grant described below in section 5.5. It is also anticipated that a similar agency analysis will be made for Big Chico Creek, which also supports Spring-run salmon.

5.3 Wild and Scenic River Flows in Butte County

Wild and Scenic River flows in Butte County are limited to the Middle Fork of the Feather River, and resulting flow demands will be set within the management program for the river. As available, the flow demands for the Middle Fork can be incorporated in the overall Butte County environmental water demand. However, the Middle Fork is not included in this analysis of environmental water demand by native ecosystems.

5.4 Managed Wetlands in Butte County

[By Lara Memmott (Butte County Department of Water and Resource Conservation)]

The managed wetlands (by California Department of Fish and Game) in Butte County are situated in the western and southwestern portions of the County. The Upper Butte Basin Wildlife Area (See attached Figure 5-2) has two management areas in Butte County, the Llano Seco Unit and the Little Dry Creek Unit. The Llano Seco Unit is 1,516 acres of which 60% is wetland habitat. This area also has riparian and upland habitat type. There are 4,000 acre feet of water per year used on Llano Seco Unit. The Little Dry Creek Unit is 4,000 acres and 75% wetlands. Water use is approximately 7 to 85 acre feet per year used on this unit. The management activities that cause water use to vary are the development projects that are in initial stages. The Fish and Game won't use any water during construction then will provide enough water for riparian plants to become established before diminishing flows for the following two years. These lands are managed for 13 species of Federally or State listed species and there are 50 species of special concern.

Table 5-1
Water Demand for Managed Wetlands in Butte County

Acres	Land Type	Water Used / Method of Dispersal	Source Water	Length of Water Use
1,516	wetland/ upland/ riparian	4000 acre feet		Annually
4,000	w/u/r	7-85 acre feet		Annually

5.5 Environmental Water Project – Butte Creek Instream Flow Augmentation

The Environmental Water Program (EWP) is an element of the CALFED Ecosystem Restoration Program intended to acquire water from willing sellers on streams tributary to the Sacramento San Joaquin River Delta to improve instream conditions. Some objectives of the EWP include:

- Provide flows and habitat conditions for fishery protection and recovery
- Restore critical instream and channel-forming flows
- Improve salmon spawning and juvenile survival in upstream tributaries

Initial EWP efforts will focus on five streams identified to have the highest potential for success, including Butte Creek. A funding request to acquire additional flows for Butte Creek is currently under development. The additional water required to meet this flow augmentation will be estimated using the DFG analysis described above in

section 5.2. Big Chico Creek is listed as one of the Tier Two priority tributaries and its flow needs will be assessed in the future.

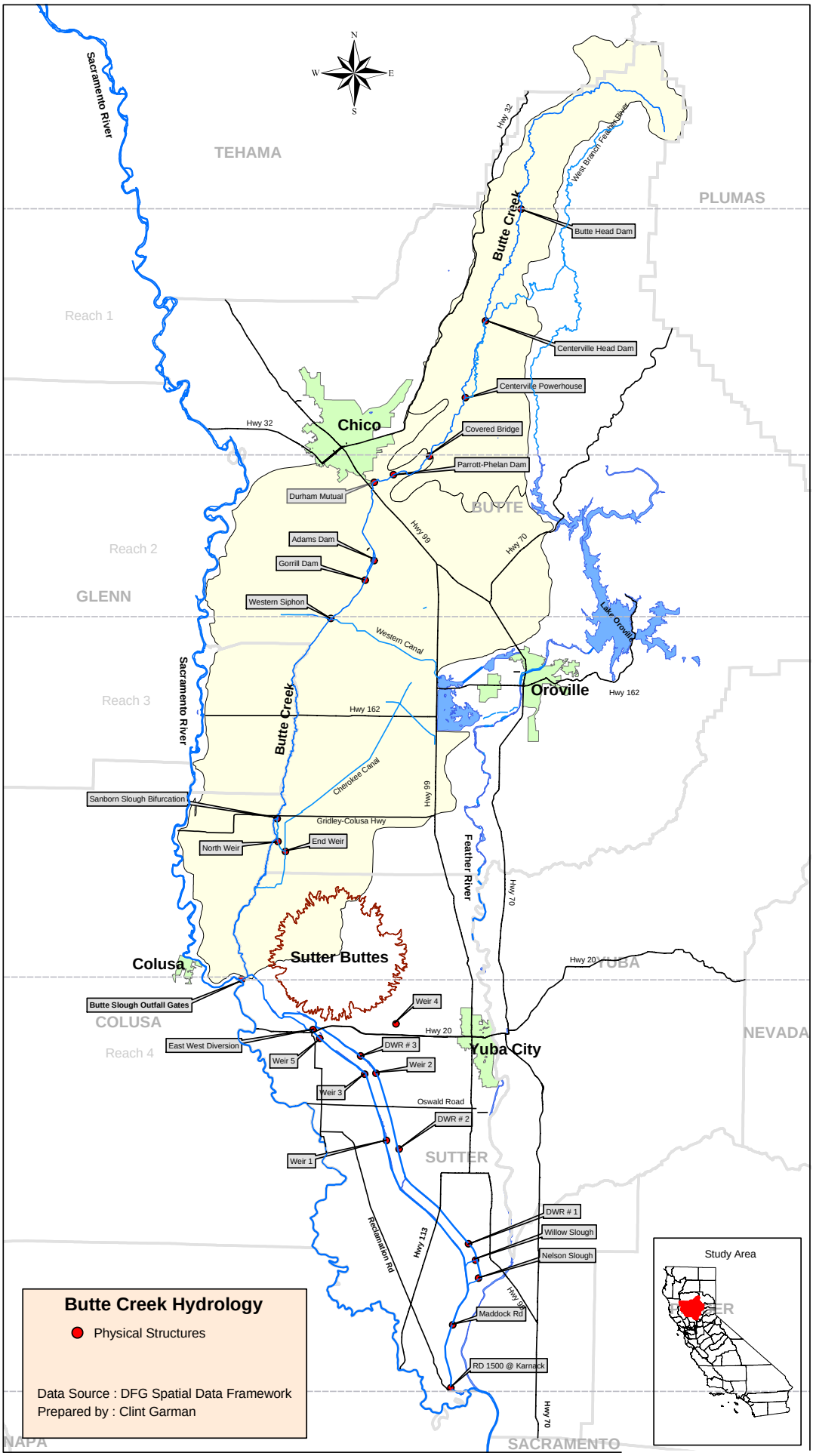

Figure 5-1
Butte Creek Hydrology

California Department of Fish and Game
Sacramento Valley Central Sierra Region
UPPER BUTTE BASIN WILDLIFE AREA
Butte County

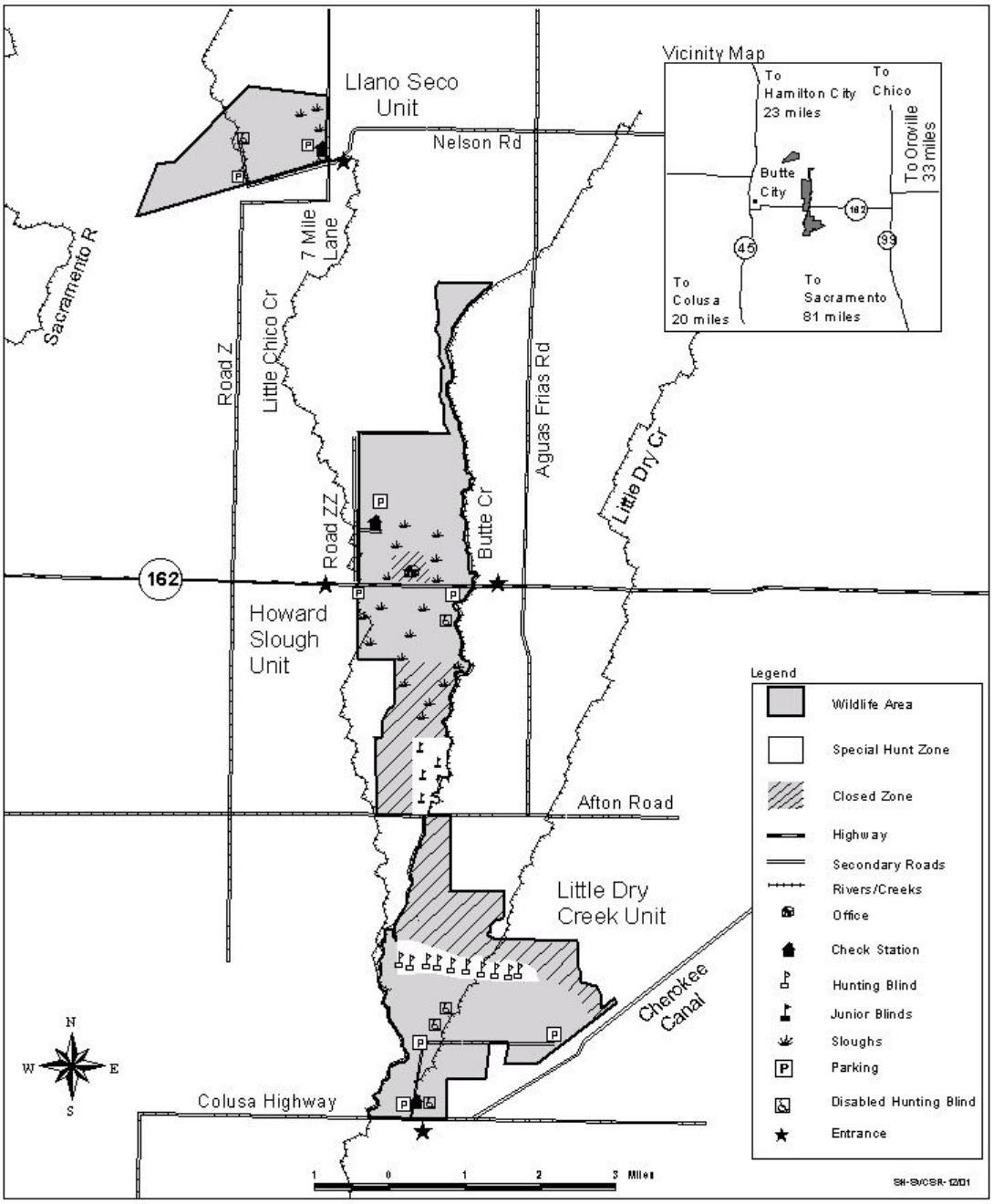

Source: California Department of Fish and Game 2003

Figure 5-2
Upper Butte Basin Wildlife Area

Section 6
Proposed Methods for Estimating Environmental Water Demand [Sub-task 4]

Existing evapotranspirational (ET) demand models will be assessed, based on ecosystem spatial extent and function. The selected models will encompass surface water evaporation seasonal variation, and micrometeorology, seasonal changes in surface water flow dynamics. Using these models, scenario testing can be performed to assess biotic "communities" potentially sensitive to fluctuations in surface water and/or shallow ground water. This approach will enable future quantification of specific ecological community demands. Appropriate candidate model(s) will be recommended for initial implementation. One of the primary considerations in model selection will be the model's ability to assess water demand under the environmental conditions present in Butte County. Both individual terrestrial and aquatic system demands and overall environmental water demand estimates will contribute to more accurate water inventory and demand analyses in Butte County.

6.1 Model Selection

The function of a hydrological model is to describe the physical processes that regulate the partitioning of precipitation into the various environmental reservoirs, including surface runoff, infiltration, percolation into deeper ground water flows, surface evaporation and evapotranspiration (ET) from vegetative land cover. The complexity of the model design is determined by purpose of the modeling effort. For first approximation of a stream flow hydrograph simple lumped models can generally suffice, however if the focus of the forecasting effort is to more fully describe the response of a system or region to precipitation input with vertical and horizontal outflows, then a more detailed physical based model with semi-distributed or fully distributed parameters is required. A primary criterion of the utility of a model is that it must be able to represent the significant processes at the scale of interest. As models are developed for application and decision making, the County will utilize peer review groups to strengthen the modeling process and efforts.

6.1.1 ET Models

Two potential models for ET analyses are SEBAL (Surface Energy Balance Algorithm for Land) and SLURP (Semi-distributed Land Use-based Runoff Processes) which have differences in approach and precision. The SEBAL model is multistep surface energy balance model that utilizes remotely sensed data derived from satellite overpass (Landsat TM), continuous micrometeorological data on surface temperatures and soil moisture. This model has been validated at basin scale in a numerous sites with widely different environmental conditions and has shown to have a 85 to 95% correspondence with extensive ground based flux towers and lysimeter measurements (Basstiaanssen *et al.*1998). One of the major problems facing fully distributed hydrological models is the assumption that precipitation is not evenly distributed across the area of study; models which address this heterogeneity

of the landscape are limited in their scalability by the number of ground-based data collection sites.

SLURP is a semi-distributed lumped land-use runoff process model which subdivides watershed basins into aggregated simulation areas (ASA's) which can further be subdivided into sub-areas of land use based on topography (Kite, 2000). Land cover data is derived from satellite imagery and is used as an indicator of climatic zones, vegetation type, soil characteristics and physiography. A close relationship between land cover characteristics and soil conditions has been has been demonstrated by Drooger *et al.* (1998). This hierarchical arrangement allows for ASAs sharing common conditions to be treated in similar manners, reducing the number of sites required for surface data collection points and computational time. The assumptions associated with treating separate ASA's as equivalent inherently reduces the models precision for a specific location within the landscape.

Both models partition precipitation inflows between vertical and horizontal components, the vertical component includes recharge of shallow and deep ground water, as well as loss to the atmosphere. The above ground component of the vertical water balance can be subdivided into surface evaporation from the soil surface and water vapor released to the atmosphere through the process of vegetative transpiration. The fluxes of water vapor above a vegetative land cover represent a composite of these two processes and are referred to as evapotranspiration (ET). Surface evaporation from soil is a relatively straight forward process governed by the by soil structure, water content, vapor pressure deficient between the soil-atmosphere interface and the amount of solar energy input. The transpirational component of the vertical water balance varies with land cover type and the extent of solar energy input. Above moderately dense plant canopies ET is appreciable, amounting to between 60-90% of the flux of water vapor from open water at ambient temperatures. Heat (sensible) and vapor (latent heat) released into the atmosphere from plant canopy surfaces through transpirational processes modifies the temperature and relative humidity of the air in contact with those plant surfaces. In turn changes in temperature and humidity feedback and modulate the heat and water vapor fluxes from the vegetation. The importance of the feedback relationship depends on the area of vegetation being considered. Small areas of vegetation, such as an agricultural field, will modify a shallow layer of atmosphere and have only small impact on surrounding processes. However if the area under consideration represents a region, hundreds of square kilometers, then water movements within the entire region will be affected by the transpirational water fluxes. Unlike the other processes considered in hydrological models canopy level transpiration can not measured directly and must be estimated.

6.1.2 Groundwater-Surface Water Models

The hydrology of Butte County is complex both in surface water systems and in shallow subsurface (groundwater) systems. Water flows are between both zones are

linked through stream-groundwater interactions, and these interactions can have a major influence on riparian vegetation communities. Riparian ET can likewise affect the local flow gradients between streams and shallow groundwater. Another form of complexity in local hydrologic systems occurs due to the widespread and intensive management of surface water and groundwater. Flow diversions occur in many natural surface channels in addition to canal and drainage ditches. Natural recharge of aquifers is potentially supplemented by leakage from impoundments and unlined water conveyance structures. The County hydrology and water resources are most recently summarized in the Butte County Water Inventory and Analysis (CDM, 2001)

Given the dynamic interactive nature of surface waters and shallow groundwater in Butte County, it will be necessary to develop a simulation model that quantify individual flows and examine changes in the County systems such as drought, alterations in streamflow, and changes in groundwater extraction. An appropriate simulation model can be used to estimate the effects of water resource management on shallow water tables and stream flows. Both of these variables exert critical controls on terrestrial and aquatic ecosystems. Two computer models were selected for review: the MODFLOW code created by the U.S. Geological Survey (McDonald and Harbaugh, 1988) and the IGSM code developed by the Modeling Support Branch of the Bay-Delta Office (DWR, 2003).

Although different computationally, both models contain many similar features. MODFLOW (Modular three-dimensional finite-difference ground-water Flow) was written primarily as a groundwater flow model and employs a finite-difference approach to simulate steady and nonsteady flow in flow systems that may be irregularly shaped. Aquifer layers can be confined, unconfined, or a combination of confined and unconfined. Simulations may incorporate flow from external fluxes, such as flow to wells, areal recharge, evapotranspiration, and flow to drains. MODFLOW is available with a stream routing package that can be used quantify flow through river beds.

The most recent version of IGSM (Integrated Groundwater-Surface water Model), IGSM-2 was developed for general water resource management analysis. In contrast with MODFLOW, IGSM-2 quantifies flow in the vadose zone and provides soil moisture accounting in the root zone. Groundwater flow is simulated using a Galerkin finite element method, and a stream routing package similar to MODFLOW incorporates stream-aquifer interactions.

6.2 Candidate Model Description

SLURP is a hydrological model which intermediate between a fully-lumped and a fully distributed process model. This semi-distributed model reduces computational demands and data requirements associated with the more complex fully distributed models while retaining the necessary physics and simplicity of operation of the lumped models. SLURP functions on a daily time-step hydrological model and

divides the region of interest into a series of spatial units, aggregated simulation areas (ASA's) for which land cover is known. SLURP simulates the behavior of the system by carrying out vertical water balance calculations for each of the ASA's with their specific land cover and routes runoff between adjacent ASA's based on topography and available channels. Precipitation is routed through the various appropriate processes to compute outputs (evaporation, transpiration and runoff) and system storage functions (canopy interception and soil moisture). Based on the extent of vegetative land cover within each ASA, rapid and slow runoff rates are computed and subsequently combined into a stream flow that is routed downstream. SLURP is flexible enough to recompute downstream flow values based on transient internal system diversion. Additionally, the SLURP model is capable of deriving topographic parameters directly from digital elevation models (DEMs).

Allocation of proportions of input precipitation into stream flows is calculated by the difference between the input and outflow through the vertical water balance. SLURP calculates evaporation from soils and transpiration from vegetation using several algorithms each with advantages and disadvantages as indicated in Table 6.1.

Table 6-1
Comparison of Evapotranspiration Computational Methods

Method	Advantage	Disadvantage
Penman-Montieth	Widely accepted	Data intensive
Priestley-Tayor	Separate E and T ; does not incorporate dewpoint or humidity	Uses coefficients
Morton CRAE	Better logic	Not widely accepted
Granger	Uses satellite data exclusively	Data intensive
Lincare	Requires only temperature data	Approximation only

The most robust of these computational methods is based on the Penman-Montieth which calculates potential evapotranspiration (E_P) using the following algorithm:

$$E_p = \frac{s}{s+\beta} x(R_n - G) + \frac{\lambda}{s+\lambda} x U_2 x(e_a - e_d)$$

where s is the slope of the vapor pressure curve, β is the adiabatic psychrometric constant, R_n is the net radiation, G is the soil heat flux, U_2 is the windspeed at two meters and e_a-e_d is the vapor pressure deficient with e_a representing saturation vapor pressure and e_d being the saturation vapor pressure at dewpoint. The adaptation of the Penman-Montieth algorithms used in the SLURP program uses separate albedos (λ) for soil and vegetation.

A more direct and less data intensive approximation of E_P can be made utilizing the Lincare computation. The Lincare method is a pan equivalent potential evaporation in mm/day and is calculated as follows:

$$E_p = \frac{D.700T_m/(100-\phi)+u(T_a-T_d)}{80-T_a}$$

where D is the number of daylight hours divided by 12, $T_m = T_a + 0.006A_m$, T_a is the mean air temperature, A_m is the elevation in meters, ϕ is the latitude in degrees, u is the wind speed (generally defaulted to a fixed value) and T_a-T_d is the difference between air and dewpoint temperatures. This approximation can be made using only a minimal dataset.

For both ET methods soil evaporation and transpiration are computed separately in the SLURP model and depend on the ratio soil to vegetation cover for each land cover. The ratio of potential to actual ET depends on the stored water content in a system. The ratio of actual (E) to potential (E_p) increases in a linear manner from wilt point (WP) to a point half way in between that of field capacity (FP) from 0.0 to 1.0. From the half way point to FP the ratio remains constant at 1.0.

One of the inputs to SLURP will be output from the IGSM-2, which was selected over MODFLOW for hydrologic modeling. IGSM-2 was selected based on its features described above and the planned use of the model as a replacement for the existing Butte Basin Groundwater Model (R. Vince, CDM, personal communication). Recently, IGSM-2 has been used to model the Stony Creek Fan aquifer in nearby Glenn County. The implementation of IGSM-2 supporting environmental water demand analysis will need to emphasize parameterization of the shallow water bearing formations on the valley floor of the County, including the Riverbank and Modesto Formations (CDM, 2001). Additional surface water data will be required from instream surveys for aquatic ecosystem monitoring described above.

6.3 Conceptual Model of Habitats and Environmental Water Demand

The habitat categories defined in section 2.2 can be combined with the State Water Plan environmental elements to define a conceptual model for an overall environmental water demand (Figure 6.1). The working assumption of this model is that maintaining current ecosystems is a primary goal for quantifying the environmental water demand and related monitoring activities. In addition to the seven habitat categories, Figure 6.1 also includes the Middle Fork Feather River flow demand, although this water quantity would be developed separately as noted previously. The model also incorporates the adaptive management approach in setting instream flows required to maintain current aquatic ecosystems.

Vegetation ET demands are generally met by shallow groundwater and possibly some direct uptake of surface flows along stream banks. Instream flow demands are supported by a mixture of surface waters (managed diversions and natural flows) and shallow groundwater connections. Linkages between ecosystems and the waters they depend on vary in magnitude over time and space.

Butte County natural ecosystem conditions reflect water flux and availability under current climatic ranges (normal to drought) and current water resource management

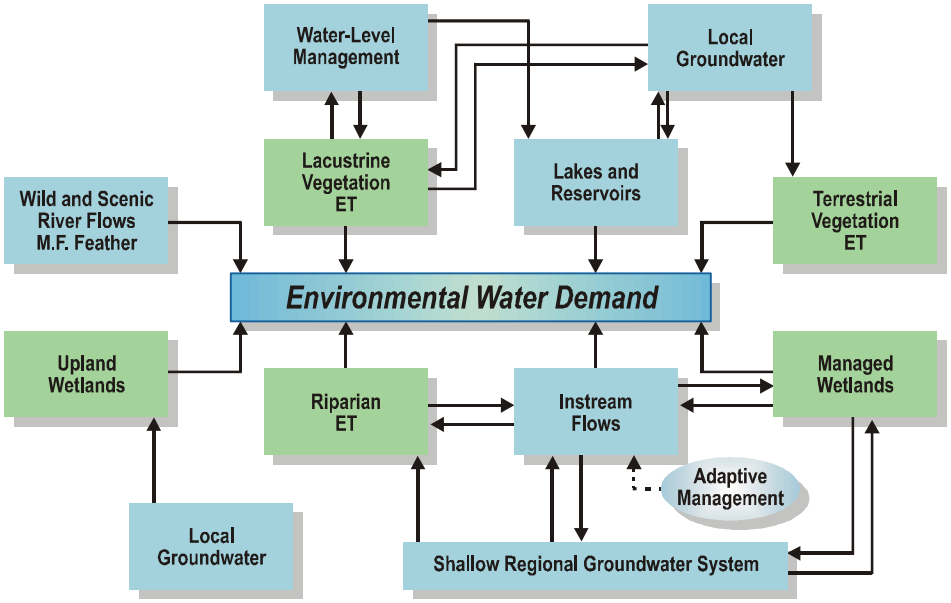

Figure 6-1
Conceptual Model of Environmental Water Demand for Butte County

practices. If climate changes significantly or water resource management undergoes significant change, there will likely be ecosystem responses such as loss of vegetation in localized areas or diminished biodiversity (species loss) in aquatic systems, for example. Quantifying the conceptual model shown on Figure 6.1 offers an approach for anticipating and possible preventing undesirable ecosystem impacts.

6.4 Integration of Terrestrial and Instream Water Demand Estimates

The overall environmental water demand for Butte County may be viewed as the sum of the demands for the individual terrestrial and aquatic ecosystems components shown on Figure 6.1. Quantification of these components will occur using the remote sensing and modeling techniques described above. A quantitative modeling framework and flowchart is shown on Figure 6.2. Two overall demand components are defined: aquatic systems and vegetative systems. Animal populations in natural ecosystems are assumed to create a water demand that is quantitatively insignificant.

Field surveys following the adaptive management approach described in Section 3 will recommend existing flow rates needed to maintain current aquatic habitat. These flow rates will be input into the IGSM-2 model along with shallow groundwater levels calibrated for groundwater-surface water interactions. Of the hydrologic conditions supporting natural ecosystems in Butte County, the shallow groundwater

zone is probably the least characterized. Thus, a new network of shallow groundwater monitoring wells will be proposed.

Stream flows from adaptive management recommendations and depth to shallow groundwater estimated through IGSM-2 simulation will then be input into SLURP for overall water balance analyses.

As described in previous sections, SLURP will also require remote sensing and climatic data for ET estimation. Data for normal and drought conditions will be used for a suite of simulations that reflect combinations of normal and drought conditions by season from Spring to Fall. It is assumed that wet (above the long-term average) conditions are not likely to limit ecosystem function under current and future water management scenarios. This suite of ET water demand scenarios will be used to create a range of overall environmental water demand estimates by adding instream flow demands within SLURP.

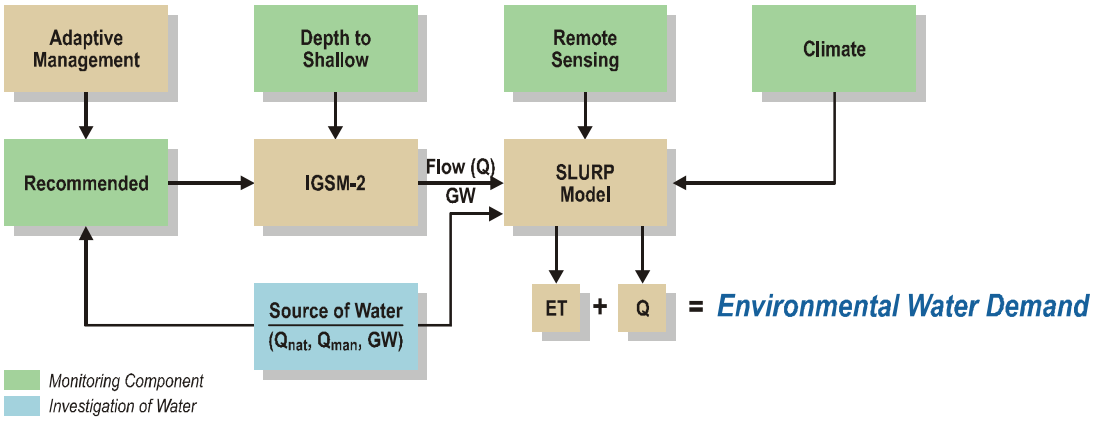

Figure 6-2
Modeling Flow Chart of Environmental Demand for Butte County

In describing the conceptual model, it was noted that the proposed modeling and monitoring will enable estimation of environmental water demand and track ecosystem conditions under current climate and water resource management activities. In order to consider climate change effects or potentially more aggressive water management approaches, it will be critical to understand the source of water that various ecosystem components depend on.

For example, there are currently several reaches of intermittent streams that support woody riparian phreatophytes, or plants requiring saturated or near-saturated conditions in the root-zone (Figure 6-3). These plants survive adjacent to creeks dry for several months every year which suggests shallow groundwater is currently not limiting plant survival. Are these shallow water table aquifers sensitive to increased deeper groundwater pumping? In other situations with perennial ponded or flowing water, is the primary source of water natural or derived from diversion and management? To answer these and related questions, Figure 6.2 also shows

monitoring activities focused on determining the general source of water supporting the major habitat categories. Improved understanding of water sources will enhance the modeling analysis and provide the basis for identifying those ecosystem components that may be especially sensitive to changing climate or water management.

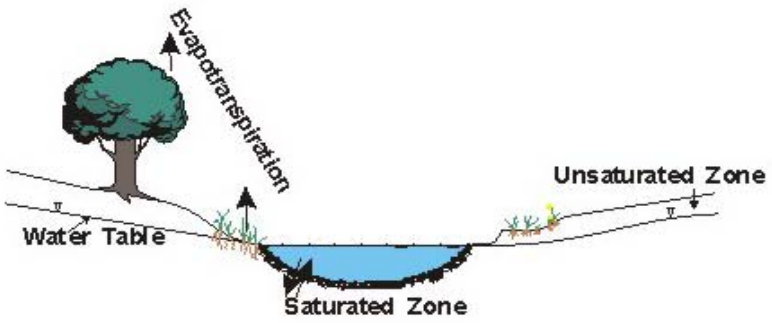

Figure 6-3
Plant-water relationships in surface water-shallow groundwater systems

Section 7
Proposed Long-Term Monitoring Program [Sub-task 5]

A spatially-specific monitoring plan will be proposed in a phased approach as described in Section 8. In the following sections, general monitoring approaches and activities are described. This program will contain a set of systematic methods that can be used to monitor the long-term health and function of those portions of Butte County in natural or near-natural conditions.

7.1 Remote-Sensing

Most methods for estimating ET are based on energy balance and use net radiation as a principal driving factor. Many of these methods incorporate aerodynamic approaches, such as wind speed or boundary layer resistance and also use vapor pressure deficient, as parameters for defining water vapor transfer. Granger (2000, 1997) demonstrated that remotely sensed data can be used to derive most of the necessary parameters for estimating ET. Remotely sensed satellite data in the visible portion of the spectrum can be used to index the surface albedo, from which net radiation can be estimated. Additionally, data detected by the infrared sensors on a satellite can provide estimates of the surface temperatures from which vapor pressure deficient (VPD) can be approximated (Granger 1995, 1997). Numerous biophysical models are capable of linking net radiation and VPD to potential evapotranspiration from vegetative tissues. The extent to which ET occurs is strongly correlated with the amount of leaf surface of plant canopies.

Leaf area index (LAI) is a measure of the density of vegetation expressed as a ratio of the ground area which it covers and can varies between 0 to over 5. These ratios can be interpreted as 0 would representing a land surface that was devoid of vegetative cover, while a higher values indicate increasing densities of leaf surface. LAI represents the surface which can intercept both incoming radiation and precipitation and has been identified as the single most important variable for quantifying energy and mass exchanges between plant canopies and the atmosphere (Running *et al.*1986). Estimates of LAI are often calculated using species specific allometric relationships which relate stem diameter to foliar biomass. Foliar biomass is subsequently converted in leaf area using mass to surface area conversion factors derive from sub sampled leaf tissues. These estimates are laborious to collect requiring extensive ground measurements and can be imprecise because local environmental conditions and leaf area biomass change with the age of the plant. These problems become even greater as the region of interest is increased to the landscape scale.

Numerous research efforts have established a relationship between LAI, an index of canopy properties, and reflectance measured by satellite sensors. The biophysical characteristics of chlorophyll pigments found in green leaves result in the absorbance of red wavelengths (R), and as such exhibit an inverse relationship of reflectance of the these wavelengths proportional to the quantity of chlorophyll present in the

vegetative land cover. However, near infrared wavelengths (IR) are poorly absorbed and are either reflected or transmitted by green vegetative tissues. The spectral reflectance of plant canopies is more than three times enriched in the IR than the visible wavelengths, this difference provides a measure of the amount of green vegetation. Soils devoid of vegetation have the inverse reflectance profiles, bare soils tend to have higher reflectance in the red region and absorb in the infrared portion of the spectrum.

Figure 7-1
Multispectral Landsat Image

In the above image the areas displayed in red represent zones of vegetation, black represents water, greens and brown represent areas bare surface and sparse vegetation

Several satellite (Landsat 4/5- 7, SPOT, AVHRR, etc.) carry detectors capable of discriminating surface reflectance values in these spectral regions. The Landsat

Thematic Mapper (TM) instruments (3-7) collect reflectance spectra on channel 3 (0.63-0.69 μ m) in the red region and channel 4 (0.76-0.90 μm) in the near infrared region of the spectrum. Data from these earth orbiting platforms can provide spectral reflectance data with differing time-steps and spatial resolution. The Landsat TM 4/5 instrument has collected images on a monthly time step back to 1982 with a ground based pixel resolution of 30 X 30 m. This data collection capability makes it possible monitor surface vegetative processes (E and ET) across landscape scales through seasonal progressions and also allows for calibration using existing data sets.

7.2 Field Surveys

The following sections describe data collection surveys for ground-truthing and calibration of vegetation and soil parameter inputs for hydrological modeling.

7.2.1 Vegetation

Data will be collected addressing species composition or plant community mapping, spectral measurements of the various vegetation types in the field will be required. The spectral signature within a pixel of the image consists of an average of the reflectances of all materials within that pixel. For example, for a spatial resolution of 30 x 30 meter pixels, the spectral response for a stand of vegetation will consist of a combination of the spectra of all vegetation types and the soil, ground litter, etc., within the picture element. Ground-truthing consists of obtaining spectrometer readings (or samples) for as many of the categories/classes of vegetation types (monoculture and mixed species) as possible within time or access constraints. These readings are obtained above the canopy and should try to be representative of reflectances detected by the airborne or satellite remote sensor. It is also valuable to collect actual leaf samples for bench analysis of reflectance to provide end-points in the analysis (to answer questions e.g., "If the canopy were all leaves, it would look like the leaf spectra. To the extent it is composed of several materials, it will look like mixtures of them). A further consideration is that of sample stratification; that is, whether to collect many readings in a single location (narrow-deep sampling) or to collect few samples at many locations (broad-shallow sampling). Project goals may drive this decision, desire resolution of for model input parameters.

Spectral data collection will consist of a calibration using the Spectralon target, and multiple spectral readings above each sample site. The calibration will be repeated several times during the sample period to establish changing light conditions or instrument drift. The field technician will have calculated the appropriate height to collect data above the target sites based on instrument parameters. Readings will be taken so as to avoid shadows, so that field equipment and vehicles will be positioned accordingly.

Each sampling site will be georeferenced (GPS), generally by the second field technician, who will also collect and store appropriate vegetative samples. Larger sites (meadow, large tree, building) and roads may be georeferenced at their

circumference in order to further "fit" the image to actual features on the ground. Data types to be collected at each location include:

GPS location:

- Spectroradiometer of Calibration Target and Vegetation
- Vegetation Sample (Leaf or Leaf Cluster)
- General Field Notes Regarding Site and Light Conditions

7.2.2 Soil Types

Soil measurements, as in vegetation spectral sampling, data collection should strive to represent the various types of soils or contamination conditions, which occur at a remotely sensed site. Soils are darker if they are wet, so at sites where water content varies, it is a good idea to measure both wet and dry soil conditions. Wet and dry soils, rock outcrop, and other geologic conditions may also warrant collecting location specific data collection, e.g., GPS. The data types will depend on project but may be the same as for vegetation sampling..

7.2.3 Atmospheric Conditions

Weather stations are needed to provide continuous monitoring of wind speed/direction, humidity, temp, and total radiance. Station data acquisition will require use of a spectrometer and cosine diffuser, battery, and data logger with computer link for download. The weather station needs to be placed in an area which is completely open to the horizon in all directions (as much as practicable) and which is not influenced by very local microclimates (such as wind around a small hill or structure) or shadows from natural or man-made features. As this station may be left operating for several days, a secure location is preferred. If the remotely sensed data will not be obtained while the weather station is operating, it is desirable to obtain as much weather data for the imaging time as can be obtained from local sources (airport, National Weather Service, etc.). In many cases, the technician performing some other aspect of the ground-truthing will also be gathering the atmospheric data. Set-up time for this station is generally less than 1 hour and the equipment will take two people to deploy.

A spectrometer fitted with a cosine diffuser is placed (pointed at the sky) in an area which is completely open to the horizon in all directions, away from shadows and sources of specular reflection. Readings are taken continuously immediately before, during and after a satellite overflight.

7.2.4 Field Notes

Each sample site should be described in the field notes to enhance the subsequent interpretation. Examples of important site descriptions include:

- Vegetation Type and Species
- Monoculture or Mixed Community
- Single Layer or Multiple Layer Community (Grass or Tree Over Grass)
- Type and Distribution of Ground Cover (Open Soil, Litter, etc.)
- Apparent Vegetative Health and Growth Stage
- Disturbances
- Pattern of Type Distribution Sharp Contact Between Species or Age Classes,
- Other Patterns
- General Topography
- Time of Day and General Condition of Sky (Clouds, Wind, Haze, etc.)
- Soil Conditions (Wet or Dry)

7.3 Field Monitoring

Field based measurements are essential for the calibration and validation of the remotely collected data. Measurements collected at a limited number of representative field locations will allow scaling across the Butte County watershed. These should include basic meteorological measurements, assessments of vegetative cover and type, soil moisture and ground water levels and energy and mass transfers between the surface and the atmosphere.

7.3.1 Climate Monitoring

Latent heat (ET), CO_2 and sensible heat fluxes will be measured using the eddy covariance technique. Basic meteorological, soil moisture, and groundwater height data will also be collected throughout the study period. A three-dimensional sonic anemometer and an open path infrared gas analyzer (IRGA) mounted at the top of a scaffolding tower measured the three components of the wind velocity vector, sonic temperature, and the densities of water vapor and CO_2. These will be sampled at to be determined time-step by a datalogger which will calculate covariances using block Reynolds averaging. The tower height and measurement footprint will be determined by the characteristics of the monitoring site. The sonic temperature was used to calculate sensible heat flux using the method suggested by Paw U et al., 2000, which accounts for a missing energy balance term associated with the expansion of air during evaporation under constant pressure.

Above canopy measurements will be made with a wind vane/anemometer, a temperature/relative humidity probe, and canopy net radiation using a radiometer

attached to a horizontal boom extending from the tower. Ground heat flux will measured with soil heat flux plates installed 0.05 m below ground level. Measurements of the rate of change of soil temperature above the heat flux plates (at 0.02 and 0.04 m) allow calculation of the soil heat flux at the surface using estimates of the specific heat of the 0.05 m thick soil layer obtained with a thermal properties sensor.

7.3.2 Monitoring of Depth to Shallow Ground Water

Soil moisture was measured with time domain reflectometry (TDR) multiple segment probes, measuring at 10, 20, 30, 60, 90 and 100 cm of soil depth. A network of piezometers will be installed to measure fluctuations in the water table. Measurements of water table elevation will be made using pressure transducers and periodically manually checked afterward to confirm accuracy of the transducers. A tipping bucket rain gage measured the precipitation at the top of the tower. Data from all the sensors were recorded on dataloggers which will be interrogated every 7–10 days by a laptop PC.

7.3.3 Remote Sensing

The above cited data will be used to calibrate and validate remotely sensed data. Satellite and aerial photography will be used to collect county scale multispectral and infra-red images. These data will serve as input parameters into the SLURP model to determine the vegetative contribution to the vertical water balance, evapotranspiration (ET).

7.3.4 Monitoring of the Source of Water

Stable isotopes of oxygen in xylem water extracted from twigs will be used as natural tracers for determining the fraction of water taken from groundwater and unsaturated soil layers (Ehleringer and Osmond, 1989 and Brunel *et al*.1995). Plant stems of approximately 0.5 cm in diameter will be sampled at midday from sunlit branches and stored in airtight glass vials for subsequent analysis of hydrogen and oxygen isotope ratios (δD and $\delta^{18}O$). Soils will be collected at each site from 5, 10, 25, 50, and 100 cm depths for analysis of δD and $\delta^{18}O$ of water and gravimetric water content (θ_g). Local floodplain groundwater will be collected from wells at each sampling period and at all sites. At the perennial reach, regional groundwater will be collected from a deep well located at some distance from the stream and outside the local floodplain. Precipitation will be collected at all sites in standard rain gauges that contained a layer of mineral oil to minimize evaporation. These integrated precipitation samples will collected at regular interval throughout the monitoring period. A Scholander type pressure chamber (PMS, Corvalis, OR) will used to measure predawn leaf water potentials (ψpd) on every sampling date.

Section 8
Proposed Implementation of Environmental Monitoring Plan

A spatially-explicit environmental water demand analysis should be performed in a phased implementation process. Methods described in previous sections will be applied in a large-scale trial to fully test the modeling framework and refine priorities for additional data gathering. Specific ecosystem monitoring activities will include both field observations and analysis of derived data through remote sensing techniques. Together, a combination of both measured and remote sensing data should provide a cost-effective basis for monitoring and managing terrestrial and aquatic ecosystems in Butte County.

8.1 Phase 1: Preliminary Demand Analysis

In the first phase, a large-scale test of the plan is proposed for three Water Inventory Sub-Units: Llano Seco, Cherokee, and Vina. These units contain contrasting environmental conditions ranging from the lowest floodplains near the Sacramento River to the transition from the valley to the lower foothills. Land use also varies, from nearly all agriculture to urban conditions in Chico. Dependence on and development of groundwater resources varies from fairly limited use at Llano Seco to more intensive use in the other two units. One of the unknowns throughout the implementation process will be the extent to which local land owners will permit access to small local creeks for aquatic habitat field surveys.

The first task will be to assemble available data (vegetation, soils, water) needed for modeling tasks. Initial model runs and sensitivity analyses will likely reveal critical data gaps that must be met through new measurements. Thus, there will be a need to initiate new field monitoring of environmental variables (meteorological, vegetation, soils, and subsurface water conditions). In particular it will be necessary to quantify interactions between surface waters (small tributary streams and sloughs) and shallow groundwater. Seepage monitoring and stream gaging efforts will provide necessary data.

These new data will be incorporated into subsequent rounds of water demand analysis. As the results are reviewed, there will likely be refinements made to the various models employed (SLURP and IGSM-2). The final task of Phase 1 will be a report of findings and a review of the progress to date. External peer-review of the modeling and field efforts should be conducted. The overall time frame for Phase 1 is estimated to be three years, with testing lasting the second and third years. In part this time frame reflects the need to ensure a minimum of one full year for vegetation monitoring and one full summer season for monitoring aquatic systems.

8.1.1 Terrestrial Vegetation Systems

Remote sensing holds a great deal of promise for monitoring and management of water resources on a county scale. These technologies may represent the most efficient management assessable tool for monitoring environmental water demand provided that these spatially collected images have been validated by ground-truthed measurements. To meet this objective during phase 1, model development, we will utilize current and archived satellite imagery to calibrate model input variables against current and historically validated ground-based site characterization and measurements of surface and ground waters, and estimations of vegetative evapotranspirational demands (ET) in the selected representative land-use classes. The specific details of the associated field procedures have been discussed elsewhere in this document (see section 7.2).

The product of this first of phase of model development will be preliminary hydrological coefficients, which can be monitored indirectly by remotely sensed vegetation characteristics, such as the normalized difference vegetation index (NDVI) (see section 7.1) that would be necessary for county scale adaptive management strategies. These coefficients will also be needed to monitor changing runoff characteristic, which are determined by surface geometry, biological and drainage networks. Remotely sensed data will be overlaid on digital elevation maps to correlate environmental water status with available water resource in a time dependent manner. The initial phase will be calibrated against previous years that represent drought, normal and wet years. Each of these years will have multiple time steps through a seasonal progression allowing for sensitivity analysis of the developed hydrologic coefficients.

8.1.2 Aquatic Systems

The first priority of the aquatic systems demand analysis and monitoring program is to focus first on smaller tributaries in Butte County. Both the Feather River and Butte Creek have substantial water and biological management programs already in progress. Implementation of the Environmental Monitoring Plan should emphasize coordination with concurrent programs seeking to assess water demands within the larger channels. Big Chico Creek is also identified for future water demand analysis related to salmon populations.

During Phase 1, an aquatic aquatic-life habitat use and inventory portion of the work would involve three complimentary monitoring objectives examining seasonal and permanent water bodies: 1. fish use of aquatic habitat, 2. aquatic insect use of available habitat and 3. physio-chemical evaluation of the habitat. In order to plan for future development in the county as well as manage current aquatic resources, each of these aspects of the County's aquatic biodiversity would need to be evaluated. We propose to examine each of these aspects in the three test areas using the methods detailed below.

8.1.2.1 Fish Use of Aquatic Habitat

Fishes in California have complex lifecycles that encompass a diverse set of habitats throughout the year. Our native fishes should be cued by the historic seasonal patterns found in the Central Valley and should respond within this framework. This includes use of temporary/seasonal habitats as well as more permanent water bodies. We propose the following evaluative monitoring program:

- Evaluation of juvenile fall-run Chinook salmon rearing and growth in seasonal and permanent water bodies. As charismatic flag-ship species in the aquatic systems, we need to have a better understanding of how and when salmon use our water resources. This would include weekly sampling of salmonid populations in multiple sites within the test sections from October through April.

- Evaluation of native non-game fish spawning and rearing activity. The vast majority of the fish fauna inhabiting Butte County are not salmon or trout, they are non-game species. We need to have a better understanding of how and when these species use our aquatic resources. This would involve weekly sampling of fish larvae distribution and abundance at permanent sampling sites within the test sections from February through July.

8.1.2.2 Aquatic Insect Use of Habitat

Aquatic insects also have rich and complex lifecycles that utilize a diverse array of aquatic habitats including seasonal and permanent water bodies. As the base of the freshwater food webs, aquatic insects play an important role in the overall health and ecology of our stream systems. We propose the following evaluative monitoring program:

- Evaluation and comparison of the aquatic insect fauna in permanent and seasonal freshwater habitats throughout the year. Some aquatic insects inhabit the below-ground wetted zone of stream systems and may rely on the presence of groundwater during periods of no surface flow. This evaluation would involve bi-weekly aquatic insect sampling as well as adult emergence sampling in both test sections.

8.1.2.3 Physio-chemical Evaluation of the Habitat

The aquatic biota of local stream systems has species-specific ranges of physical and chemical tolerance. In order to properly evaluate the needs and requirements of the aquatic organisms we need to evaluate the environmental parameters of their habitat. This would involve measuring the following suite of parameters: stream flow or discharge, water depth, physical extent of wetted habitat, temperature (above and below ground), specific conductance, pH, turbidity, dissolved oxygen, substrate availability, aquatic plant community, and the extent of shaded aquatic habitat. This suite of measurements would be taken on each sampling occasion and be standardized between the fish and aquatic insect sampling.

8.2 Phase 2: Conduct County-wide Assessment

Following completion of Phase 1, the next step will be to apply the monitoring and modeling framework to the remaining 13 Water Inventory Sub-Units on the valley floor. Once the monitoring and modeling approaches are finalized, the remaining Water Inventory Sub-Units can be readily assessed provided adequate finding is available for intensive field efforts in aquatic systems. At the outset of Phase 2, an assessment should be made of the feasibility of assessing the water demand and environmental conditions in the Foothill and Mountain Water Inventory Units. Methods for estimating vegetation water demand in upland ecosystems are more difficult due to a lack of plant water use coefficients and complex micro-meteorological conditions.

During phase 2, the focus will be on refining the hydrological coefficients through the use of surface energy balance techniques. In this phase site specific exchanges of latent heat (ET) and sensible heat fluxes will be monitored using eddy covariance techniques that measure directly the movement of water and heat between the ground, vegetative cover and the atmosphere. Details of the procedures involving eddy covariance techniques are summarized in section 7.3.1. These measurements will be made at sites to be determined during Phase 1. The goal is to select sites that are generalizable enough such that the results can be transferable to additional locations.

Additional outcomes of this monitoring phase will be the quantification of changes in depth to shallow ground water, the likely source of water for most of the vegetation. Surface soil moisture contents will be measured using time-domain-reflectometry (TDR) techniques and the depth to the water table elevation will be followed throughout the seasonal progressions using a network of piezometers (section 7.3.2). A field test is proposed to monitor the effects of developing new water supply wells on shallow aquifers and groundwater-stream interactions. Finally, we will address the question of the actual source water being accessed by vegetation, whether it shallow or deeper ground water in upland sites and whether riparian vegetation draws directly from instream water (section 7.3.4)

8.3 Long-Term Monitoring

Beyond completion of the initial environmental water demand analysis, it will be necessary to periodically update environmental water demand – The time frame for these updates will be based on climatic trends (extended periods of drought) and significant changes in water management efforts. Combinations of these moderate changes in these two factors (climate and water management) may also prompt the need for an update. A general time frame for updates might be approximately every three or six years, to coincide with the State Water Plan updates.

8.4 Phase 1 Preliminary Cost Estimate

Accurate estimates of County-wide environmental water demand and successful monitoring of ecosystems require adequate field data to validate modeling and

remote sensing tools. Field surveys are essential for the monitoring of aquatic habitats and associated water needs. Remote sensing of vegetative water-use over large areas requires ground-truthed quantitative assessments for the calibration of landscape models. Thus, focused field activities are an essential foundation for the Phase 1 activities. General cost estimates were developed for three areas of the proposed plan: terrestrial vegetation analysis, aquatic habitat surveys, and integrative hydrologic modeling of water demand estimations. The approximate cost for large-scale tests of the plan is approximately $650,000. This would result in environmental water demand estimates derived from the monitoring programs for three Water Inventory Sub-Units: Llano Seco, Cherokee, and Vina. These water units were selected as they are representative of different components of the Butte County watershed. Certain costs per Sub-Unit would be lower during Phase 2. It is anticipated that the County will pursue funds from a variety of sources to support the environmental monitoring programs. Cooperative studies will be undertaken with appropriate agency partners.

Section 9
Summary and Recommendations

Unlike analyses of water demands for urban and agricultural systems, there are no comprehensive methods for assessing the water requirements for natural terrestrial and aquatic ecosystems. Field-based and remote sensing methods exist to quantify water demands by individual species or systems. In the proposed Environmental Monitoring Plan for Butte County, proven methods and models have been assembled to create an integrated framework for quantifying environmental water demand. This analytical framework will yield water demand estimates for both terrestrial and aquatic ecosystems under normal and drought years. The modular approach of the analytical framework will allow individual models or spatial analysis tools to be updated in the future. A phased approach of implementation is proposed to allow adequate testing of the individual analytical components and integrating models. After testing and refinements, the proposed Environmental Monitoring Plan should provide robust estimates of environmental water demands and tools for monitoring the health of terrestrial and aquatic ecosystems.

Specific recommendations include:

1. Secure funding and commence with Phase 1 testing of the Plan.

2. Solicit diverse external peer review of the modeling approach and Phase 1 results.

3. Pursue an investigation of source waters supporting riparian and aquatic ecosystems during the second two years of Phase 1. In order to consider climate change effects or potentially more aggressive water management approaches, it will be critical to understand the source of water that various ecosystem components depend on.

Section 10
References

Bailey, Robert G. 1995. Description of the ecoregions of the United States (2nd ed.). Misc. Pub. No. 1391, Map scale 1:7,500,000. USDA Forest Service. 108pp.

Bastiaanssen, W.G.M., Pelgrum, H., Wang, J., Ma, Y., Moreno, J.F., Roerink, G.J. and van der Wal, T. 1998. A remote sensing surface energy balance algorithm for land (SEBAL). 2. Validation. Journal of Hydrology 212-213:213-229.

Brunel, J.P., Walker, G.R. and Kennett-Smith, A.K., 1995. Field validation of isotopic procedures for determining source water used by plants in a semi-arid environment. *J. Hydrol.* 167, pp. 351–368.

California Department of Fish and Game. 2003. Upper Butte Basin Wildlife Area. Accessed on: June 7, 2004. Accessed at: http://www.dfg.ca.gov/lands/wa/region2/upperbuttebasin.html

CDM (Camp Dresser and McKee), 2001. Butte County Water Inventory and Analysis. Butte County Department of Water and Resource Conservation. Oroville, CA.

Castleberry, D. T., J. J. Cech, D. C. Erman, D. Hankin, M. Healey, G. M. Kondolf, M. Mangel, M. Mohr, P. B. Moyle, J. Nielsen, T. P. Speed, and J. G. Williams. 1996. Uncertainty and Instream Flow Standards. Fisheries V21:20-21.

Drooger, P. 2000. Estimating actual evapotranspiration using a detail agro-hydrological model. Journal of Hydrology 229: 50-58.

DWR (Department of Water Resources), 2003. IGSM2: Integrated Groundwater-Surface water Model 2. http://modeling.water.ca.gov/hydro/model/indexigsm2.html.

Ehleringer, J.R., Osmond, C.B., 1989. Stable isotopes. In: Pearcy, R.W., Ehleringer, J., Mooney, H.A., Rundel, P.W. (Eds.), Plant Physiological Ecology: Field Methods and Instrumentation. Chapman & Hall, London, pp. 281–300.

Fausch, K. D., C. E. Torgersen, C. V. Baxter, and H. W. Li. 2002. Landscapes to riverscapes: bridging the gap between research and conservation of stream fishes. Bioscience 52:483-498.

Granger, R.J. 2000. Satellite-derived estimates of evapotranspiration in the Gediz basin. Journal of Hydrology 229:70-76.

Granger, R.J. 1997. Comparison of surface and satellite derived estimates of evapotranspiration using a feedback algorithm. *In*: Kite. G.W., Pietroniro, A., Putz, T.J. (eds.) Application of remote sensing in hydrology. Proceedings of the Third International Workshop NHRI Symposium. Pp71-81.

Granger, R.J. 1995.A feedback approach for the estimation of evapotranspiration using remotely sensed data. *In*: Kite. G.W., Pietroniro, A., Putz, T.J. (eds.) Application of remote sensing in hydrology. Proceedings of the Second International Workshop NHRI Symposium. Pp211-221.

Jing-ling, L. and Y. Zhi-feng. 2002. Ecological and environmental water demand of the lakes in the Haihe-Luanhe Basin of Northern China. Journal of Environmental Sciences 14(2):234-238.

Kite, G.W., 2000 Using a basin-scale hydrological model to estimate crop transpiration and soil evaporation, Journal of Hydrology, 229(1-2):59-69.

Mathur, D., W. H. Bason, E. J. Purdy, and C. A. Silver. 1985. A critique of the instream flow incremental methodology. Canadian Journal of Fisheries and Aquatic Sciences 42:825-831.

Mayer, K.E., and W.F. Laudenslayer (eds.). 1988. A guide to Habitats of California. California Department of Forestry and Fire Protection. 166 pp.

McDonald, M.G., and Harbaugh, A.W., 1988. A modular three-dimensional finite-difference ground-water flow model: U.S. Geological Survey Techniques of Water-Resources Investigations, Book 6, Chapter A1, 586 p.

Moyle, P. B., M. P. Marchetti, J. Baldrige, and T. L. Taylor. 1998. Fish health and diversity: Justifying flows for a California stream. Fisheries V23:6-15.

Kite, G. 2000. Using a basin scale hydrological model to estimate crop transpiration and soil evaporation. Journal of Hydrology 229:59-69.

Paw U, K.T., D.D. Baldocchi, T.P. Meyers and K.B. Wilson, Corrections of eddy covariance measurements incorporating both advective effects and density fluxes. *Bound.-Lay. Meteorol.* 97 (2000), pp. 487–511.

Running, S.W., Patterson, D.L., Spanner, M.A., and Teuber, K.B. 1986. Remote sen sing coniferous forest leaf area. Ecology 67:273-276.

UCSB (University of California, Santa Barbara). 2002. California Gap Analysis Project. Project report at
http://www.biogeog.ucsb.edu/projects/gap/report/gap_rep_sum.html

Williams, J. G. 1996. Lost in space: minimum confidence intervals for idealized PHABSIM studies. Transactions of the American Fisheries Society 125:458-465.