Butte County Department of Development Services

PERMIT CENTER

7 County Center Drive, Oroville, CA 95965

Main Phone (530) 538-7601 Permit Center Phone (530) 538-6861 Fax (530) 538-7785

FORM NO

DBP-70

BUILDING PERMIT APPLICATION REQUIREMENTS FOR GROUND MOUNTED PHOTOVOLTAIC SYSTEMS

- ❒ 3 site plans signed by the preparer of the plans. Paper to draw site plans (form DBP-3) and site plan submittal requirements (form DBP-2) are available at the Development Services counter. *At least one site plan must be 11" x 17".*

- ❒ 2 copies of the manufacture's specifications for the inverter and the photovoltaic panels (showing panel length, width, and weight).

- ❒ 2 copies of engineered details for the footings and attachments of photovoltaic panels. These details must be signed and stamped by the engineer who prepared them.

- ❒ 2 Copies of single line electrical drawings

Note: Installation shall conform to the California Electrical Code (CEC) Article 690 Solar Photovoltaic Systems. All equipment and components shall be listed and labeled by Underwriters Laboratories or other recognized agency.

Your plans may be routed to other regulatory entities for review, including but not limited to Planning, Public Works, Environmental Health, and California Department of forestry. To help expedite your permit, please be responsive to requests from County departments for any additional materials or requirements.

PLEASE NOTE: Payment is required when you apply for a building permit. We take payment in the form of credit, cash, check, or money order.

**When filed, the application and all supporting materials becomes subject to the California Public Records Act. All public information related to this application is subject to public inspection and will be posted on the County's website for electronic access.*

BUTTE COUNTY
DEPARTMENT OF DEVELOPMENT SERVICES
BUILDING PERMIT APPLICATION*
Phone: (530) 538-7601 Fax (530) 538-7785
Website: www.buttecounty.net/dds
Payment of Fees Required at Time of Application
PLEASE PRINT CLEARLY

PERMIT NO:	FORM NO
BIN NO:	DBP-1

PROPERTY OWNER INFORMATION

Last Name	First Name	
Mailing Address		
City	State	Zip
Phone	Fax	
Email	Cell	

CONTRACTOR

Name		
Mailing Address		
City	State	Zip
Phone	Fax	
Email	Cell	
License No.	Class	

ARCHITECT/ENGINEER

Name		
Mailing Address		
City	State	Zip
Phone	Fax	
Email	Cell	
CA State License No.		

APPLICANT

Last Name	First Name	
Mailing Address		
City	State	Zip
Phone	Fax	
Email	Cell	

APPLICANT SIGNATURE AND DATE

	Date:
Print Name:	

*When filed, this application and all supporting material becomes subject to the California Public Records Act. All public information related to this application is subject to public inspection and will be posted on the County's website for electronic access

PROJECT LOCATION

APN

Property Address

City Location must not be in the city limits of Chico, Gridley, Oroville or Paradise, click below for parcel information

http://gismaps.buttecounty.net/flexviewer/bcdatasearch/index.html

WORKER'S COMPENSATION

Policy Number

Carrier

If hiring other than a licensed contractor, a certificate of worker's compensation must be shown at the time of permit issuance

LENDING AGENCY

Name		
Mailing Address		
City	State	Zip

DESCRIPTION OR SCOPE OF WORK

Mobile Home permits (other than installation, foundation, utilities & non-attached structures) are issued by the State. Tell staff if this permit is for a Mobile Home. Click below to see Manufactured Home Alterations and Permit Guidelines at:

http://www.hcd.ca.gov/codes/mhp/HCD Phone: (916) 255-2501

Is this a Manufactured/Mobile Home (circle one) Yes / No

JOB VALUATION: **(Enter value of labor, *including non-contracted*, plus materials charge)** **$**

APN:

Square Feet Detail

Living Area:	Garage:
Open Area:	Covered Area:
☐ Structure Built without permits	**TOTAL SQ:**

☐ Proposed Change of Occupancy/Use - Note previous/current use below:

FOR OFFICE USE ONLY

Zoning:			Flood Zone:		
SRA:	YES	NO	NPDES	YES	NO
Code Enf:	☐ YES	☐ NO	Legal Lot:	☐ YES	☐ NO
Occupancy			Type Construction		
Permit Tech:			**Date:**		

K:\NEW_WEBSITE\Building\Building Forms & Documents\2014\2014 Forms - Completed\DBP\DBP-01_Building_Permit_Application_rev'd_3.6.2014_AKM.rtf

Butte County Department of Development Services
PERMIT CENTER
7 County Center Drive, Oroville, CA 95965
Main Phone (530)538-7601 Permit Center Phone (530)538-6861 Fax (530)538-7785

FORM NO
DBP-2

BUILDING PERMIT SUBMITTAL REQUIREMENTS
SITE PLAN REQUIREMENTS

GENERAL INFORMATION

Your site plan may be reviewed by various departments: Building, Planning, Environmental Health, Public Works, CDF, Agricultural Commission, etc. so you will need to include information to satisfy numerous agencies.

- **Please label all items as clearly and completely as possible.**
- **Site plans must be fully dimensioned and clearly drawn on clean paper.**
- **Size: 11" x 17"**

*Blow-ups or insets may be used to provide more detail where required. (**Note:** A scaled site plan may be required, if necessary for septic system permit or other plan review.)*

REQUIRED ITEMS

- Owner's name
- Assessor's Parcel Number
- North arrow
- Property lines with dimensions: As shown on assessors map or parcel map
- Distances between improvements **and** from property lines
- Setbacks
- Any features such as cliffs or areas of slope: Include direction & approximate degree of slope
- New buildings are required to meet Minimum Erosion and Sediment Controls
- Measures or Best Management Practices (BMP)

EXISTING AND PROPOSED ON-SITE IMPROVEMENTS INCLUDING:

- Buildings or other structures
- Pools
- Tanks
- Retaining walls
- Cuts and/or fills

ROAD FEATURES INCLUDING:

- Location and name of frontage road(s) serving property
- Location of driveway
- Right-of-way
- Easements

ALL WATER RELATED FEATURES INCLUDING:

- Flood zone
- Septic / Sewage disposal systems (original and replacement)
- Wells
- Waterlines
- Springs
- Creeks or Streams - Seasonal creeks and drainage ditches

BUTTE COUNTY DEPARTMENT OF DEVELOPMENT SERVICES

Building Division
7 County Center Drive
Oroville, CA 95965

PH: 530-538-7541
FAX: 530-538-2140
www.buttecounty.net/dds

SITE PLAN REQUIREMENTS

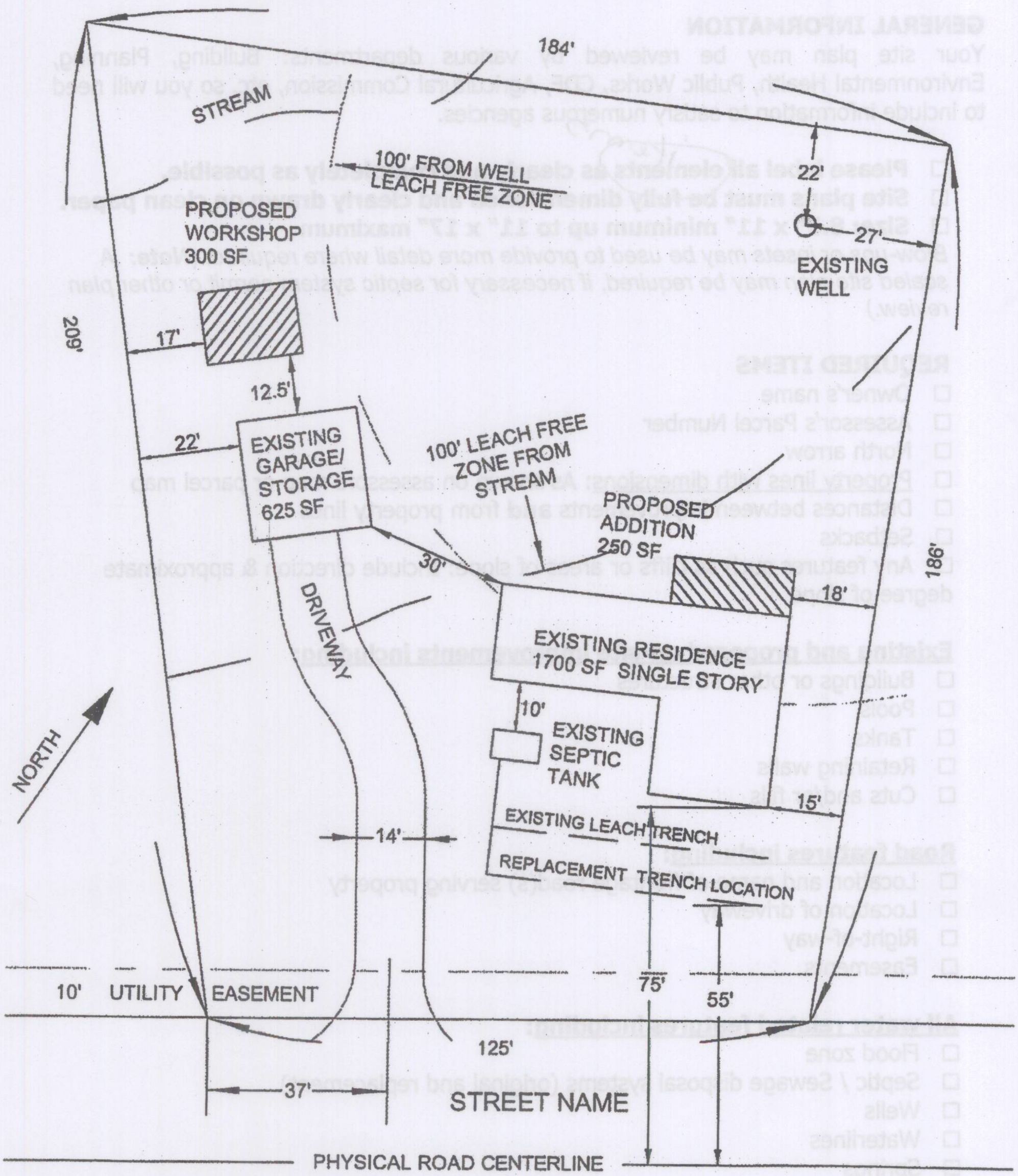

BD 0029	REVISION DATE: 5/14/07	REVISED BY: P.H.

Butte County Department of Development Services
PERMIT CENTER
7 County Center Drive, Oroville, CA 95965 Main Phone (530)538-7601 Permit Center Phone (530)538-6861 Fax (530)538-7785

FORM NO
DBP-3

SITE PLAN

Assessor's Parcel Number: ☐ ☐ ☐ — ☐ ☐ ☐ — ☐ ☐ ☐ Permit #: _____

Owner Name: _____ Scale 1" = _____
Address / Phone: _____
Site Location: _____
Contact Name: _____ Phone: _____

Butte County Department of Development Services

PERMIT CENTER

7 County Center Drive, Oroville, CA 95965

Main Phone (530) 538-7601 Permit Center Phone (530) 538-6861 Fax (530) 538-7785

FORM NO

DBP-75

SAMPLE ELECTRICAL DIAGRAM

This sample plan is for illustrative purposes only. All building applications must reflect site specific conditions.

EQUIPMENT SCHEDULE

TAG	DESCRIPTION	PART NUMBER	NOTES
1	SOLAR PV MODULE	AS 175	AMERICAN SOLAR, QUANTITY - 48 (SEE NOTES SHEET FOR DETAILS)
2	PV ARRAY	N/A	ARRAY IS 4 STRINGS WITH 12 MODULES PER SERIES STRING
3	J-BOX (IF USED)		6"x6"x4" NEMA 4, PVC JUNCTION BOX
4	COMBINER (IF USED)	MFR-supplied	15-A MAX FUSE W/15-A FUSES, 600VDC, 4-STRING MAX
5	DC DISCONNECT	MFR-supplied	LISTED WITH INVERTER, 600VDC, 60-AMP (SEE GUIDE APPENDIX C)
6	DC/AC INVERTER	AI-7000	7000 WATT, SINGLE PHASE (SEE NOTES SHEET FOR DETAILS)
7	GEN METER (IF USED)	FORM 2S	4-JAW, 240V CYCLOMETER REGISTER KWH METER IN 100-A BASE
8	AC DISCONNECT (IF USED)	D222NRB	240VAC, 60-AMP FUSED W/ 40-A FUSES (SEE GUIDE APPENDIX C)
9	SERVICE PANEL	SD200SL	240VAC, 200-A MAIN, 200-A BUS, 40-A INVERTER OCPD
			(SEE NOTE 5 FOR INVERTER OCPDs, ALSO SEE GUIDE SECTION 9)

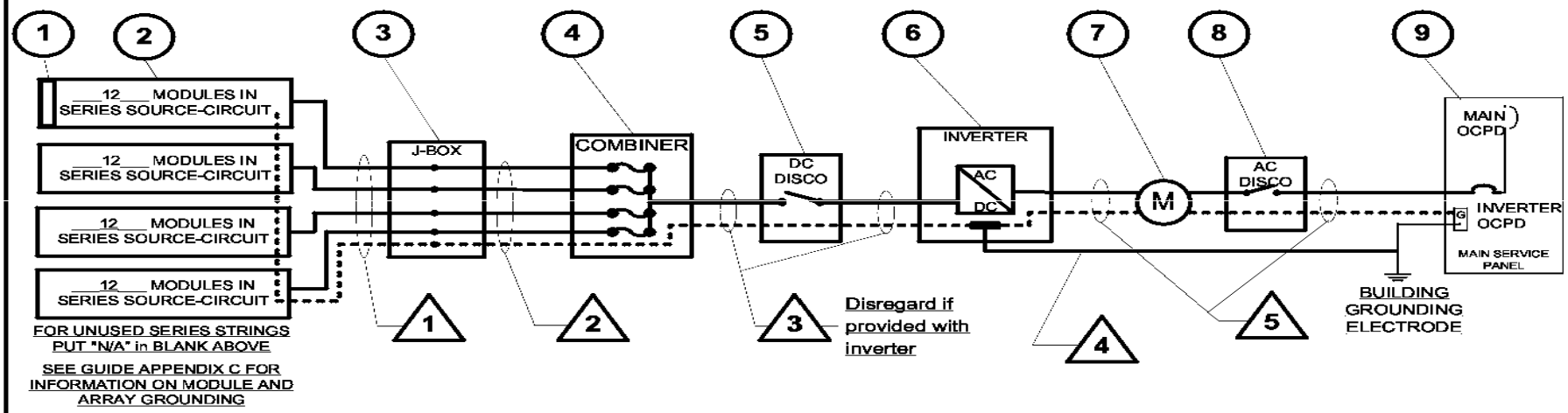

CONDUIT AND CONDUCTOR SCHEDULE

TAG	DESCRIPTION OR CONDUCTOR TYPE	COND. GAUGE	NUMBER OF CONDUCTORS	CONDUIT TYPE	CONDUIT SIZE
1	USE-2 ☒ or PV WIRE ☐	10 AWG	8 BLACK	N/A	N/A
	BARE COPPER EQ. GRD. COND. (EGC)	10 AWG	1 BARE CU	N/A	N/A
2	THWN-2 ☒ or XHHW-2 ☐ or RHW-2 ☐	10 AWG	4-R, 4-W, 1-G	EMT	¾"
3	THWN-2 ☒ or XHHW-2 ☐ or RHW-2 ☐	N/A	N/A	N/A	N/A
	INSULATED EGC	N/A	N/A		
4	DC GROUNDING ELECTRODE COND.	6 AWG	1 BARE CU	N/A	N/A
5	THWN-2 ☒ or XHHW-2 ☐ or RHW-2 ☐	8 AWG	1-R, 1-B, 1-W	EMT	¾"
	INSULATED EGC	10 AWG	1 GREEN		

Contractor Name, Address and Phone:

Bill and Ted's Solar
456 Industrial Drive
San Jose, CA
408-555-1212

One-Line Standard Electrical Diagram for Small-Scale, Single-Phase PV Systems

Site Name: Joe and Jane Homeowner
Site Address: 123 Sunnyside St., San Jose, CA
System AC Size: 6.9 kW Solar Array

Drawn By: Bill	SIZE	FSCM NO	DWG NO E1.1	REV 0
Checked By: Ted	SCALE NTS	Date:	SHEET	

Butte County Department of Development Services
PERMIT CENTER
7 County Center Drive, Oroville, CA 95965
Main Phone (530) 538-7601 Permit Center Phone (530) 538-6861 Fax (530) 538-7785

FORM NO

DBP-69

Photovoltaic Inspection Guidelines

Residential Interactive Systems

In General

- ❑ Customer/Installer shall provide Approved Plans on site for inspector.
- ❑ Photovoltaic module number and location of installation must match Approved Site Plan.
- ❑ Customer/Installer shall provide access to all areas needed for inspection.
- ❑ On Roof, if Tile – Installer shall provide properly supported temporary walking surface to access all connections of all modules. If two story – Installer shall provide a proper and secured ladder(s) to access all areas.
- ❑ In House – If wiring in attic and/or garage area, the customer/installer shall ensure access to attic and/or garage.

On Roof

- ❑ Verify all structural supports are properly installed per listing and properly sealed.
- ❑ Verify all metallic raceways, J-boxes, supports and modules are properly grounded. Modules shall be grounded separately to allow removal of a single module and without disrupting the grounding of other modules by means of properly installed wires, lugs, screws, bolts or other listed methods. (Sheet Metal Screws are not allowed – 250.8). 2013 CEC, Article 690.43
- ❑ Verify all exposed wiring is listed Sunlight Resistant. 2013 CEC, Article 690.31
- ❑ Verify all module interconnections connectors require a tool for opening. 2013 CEC, Article 690.33

DC Disconnect

- ❑ Verify proper location. DC Disconnect shall be readily accessible, within sight of inverter, and properly listed for 600 volt DC power. 2013 CEC, Article 690.14
- ❑ If DC wiring is run through the building, a DC Disconnect shall be installed prior to the conductors entering the building or the conductors shall be installed in metallic raceways or metallic enclosures from the point of entrance to the DC Disconnect and all J-boxes shall be labeled "DC Source Circuits". 2013 CEC, Article 690.31(E)
- ❑ Verify proper and permanent labeling with the following information; "PHOTOVOLTAIC DC DISCONNECT" and "WARNING ELECTRIC SHOCK HAZARD – DO NOT TOUCH TERMINALS – TERMINALS ON BOTH THE LINE AND LOAD SIDE MAY BE ENERGIZED IN THE OPEN POSITION". 2013 CEC, Article 690.17
- ❑ The DC disconnect shall also be properly and permanently labeled with the following Installed System Information: (1) Rated Maximum Power-Point Current (2) Rated Maximum Power-Point Voltage (3) Maximum System Voltage & (4) Short Circuit Current. 2013 CEC, Article 690.53

Note: Rooftop Micro-Inverter Systems have no DC Disconnect Switches. AC Disconnect shall be installed on the roof or at the Utility panel and be capable of being locked OFF. Installed System Information shall be installed on Utility Service Panel.

Grounding

- ❑ Photovoltaic systems with voltage over 50 volts shall be solidly grounded. 2013 CEC, Article 690.41
- ❑ The Utility Service Panel shall have a grounding electrode system. 2013 CEC, Article 690.47(A)
- ❑ Both the DC system and the AC system shall have a minimum of a # 8 copper grounding electrode conductor and both electrode conductors shall be solidly bonded to the Utility Service Panel electrode system as well as any new grounding electrodes. 2013 CEC, Article 690.47(B,C)
- ❑ Additional electrode(s) shall be installed for all arrays and as close as possible. The electrode conductor(s) shall have no other use. 2013 CEC, Article 690.47(D)

AC Disconnect and Utility Panel

- ❑ The AC Disconnect shall be permanently identified with (1) Maximum AC Output, and (2) Operating AC Voltage. 2013 CEC, Article 690.50
- ❑ If DC Disconnect, Inverter, and/or AC Disconnect are not in the same location as the Utility Service Panel is located, a permanent Plaque shall be installed on the Utility Panel identifying the location(s) of the other equipment. 2013 CEC, Article 690.56
- ❑ Photovoltaic interconnection circuit breaker at the Utility Service Panel shall not exceed 20% of the bussing rating and **shall** be positioned at the opposite end of the bussing from the main input circuit location (i.e. 20 amp for 100 amp panel). 2013 CEC, Article 690.64

Testing

- ❑ Verify Installer has installed meter jumpers, if so equipped, at PV meter socket.
- ❑ Energize system and check display for output (wait time could be up to 5 min).
- ❑ Once output observed, turn off AC power at PV interconnection circuit breaker and verify inverter output drops to 0 watts. 2013 CEC, Article 690.61

Note: Rooftop Micro-inverter Systems have LED lights to show conditions or a Voltage tester can be used at load terminals of the circuit breaker/disconnect at the service panel.